Vernis Blend
Bidet set with vertical spray
Surfaces: **Chrome** Article Number: **71214000**

Description

product features

- consists of: Bidet mixer, vertical spray
- maximum flow rate at 3 bar: 7,7 l/min
- ceramic cartridge
- vertical spray and diverter
- integrated non-return valve
- efficient from 0,5 bar onwards
- connection type: G ⅜ connections
- connection dimension: DN15

Technology

EcoSmart

Product image

Scale drawing

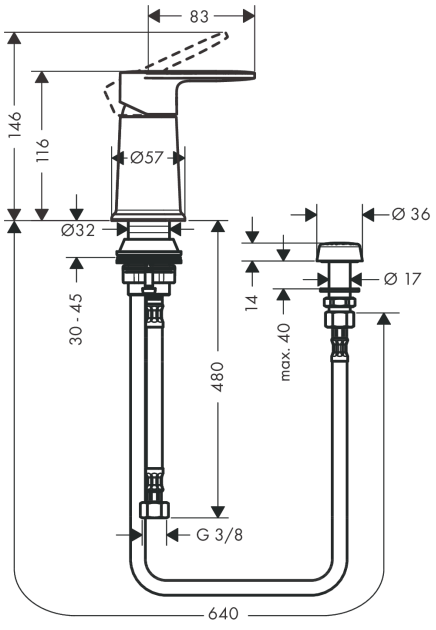
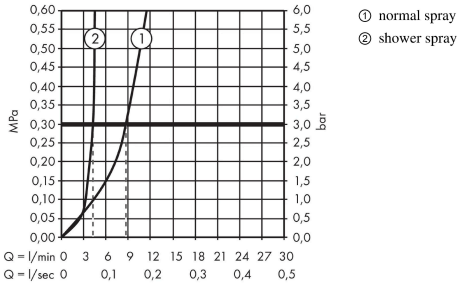
Flowchart